A HYBRID APPROACH FOR MANUFACTURABILITY ANALYSIS

Roman Stryczek

S u m m a r y

The paper describes a practical solution for knowledge acquisition of expert process planners and/or experienced machinists with sets of heuristic rules. This fuzzy approach enables to perform manufacturability analysis. Therefore, proposed knowledge system can help in identifying of potential manufacturing problems early in design stage and in determining of machining precedence constraints (hard constraints) in situation of feature volumetric interaction. Special class Weighted Priority Petri Nets and Genetic Algorithms have been used to analyse and optimize the results. Finally, an illustrative example of hole making has been used to demonstrate the proposed methodology.

Keywords: CAPP, design for manufacturing, Petri nets, computational intelligence

Hybrydowa metoda analizy produktywności

S t r e s z c z e n i e

W pracy przedstawiono praktyczne rozwiązanie problemu akwizycji wiedzy eksperta w projektowaniu procesów i/lub doświadczonych operatorów obrabiarek, reprezentowanej w postaci zbioru heurystycznych reguł. Rozmyte podejście pozwala na prowadzenie analizy technologiczności proponowanego rozwiązania. Opracowana metoda jest pomocna w identyfikacji potencjalnych problemów wytwórczych już na etapie projektowania konstrukcyjnego. Pozwala określić ograniczenia krytyczne dla relacji procedencji, wynikające z wzajemnych objętościowych interakcji pomiędzy formami elementarnymi występującymi w projektowanym wyrobie. Użyto specjalnych klas wagowych, priorytetowych sieci Petriego i algorytmu genetycznego dla analizy i optymalizacji wyników. Zaproponowane podejście przedstawiono na przykładzie ustalania sekwencji obróbki otworów, uwzględniającej technologiczność rozwiązania.

Słowa kluczowe: CAPP, technologiczność części maszyn, sieci Petriego, inteligentne obliczenia

1. Introduction

Process plans are ordered in hierarchical sequences of process/setup/ /operations able to transform a raw material into a final part or product. Manual process planning is very time-consuming and results are based on experience of a person performing the planning. At present, computer aided design (CAD) and manufacturing (CAM) systems are widely used in industry. Process planning occupies a core position between designing and manufacturing. However,

Address: Roman STRYCZEK, D.Sc. Eng., University of Bielsko-Biała, Willowa 2 Street, 43-309 Bielsko-Biała, phone (+48 33) 8279213, e-mail: rstryczek@ath.bielsko.pl

manufacturing process planning is more or less automatic, but process planning still requires much work of qualified personnel. The main problem in computer integrated manufacturing (CIM) is lack of an appropriate computer aided process planning (CAPP) system, which interlinks CAD and CAM. The barrier that hinders application of CAPP systems is mainly due to enormous complexities associated with task of the process planning [1].

A tendency has been existing over the years for the CAPP system methodologies to be developed towards Knowledge-based expert system. Prevailing overall view is such that the knowledge acquisition process constitutes a bottleneck in construction of expert systems, and hence also CAPP systems based on the expert systems. Knowledge acquisition is one of the most complex, difficult, laborious and error-prone phases that a knowledge engineer carries out while building a knowledge-based system. The knowledge acquisition process, in general, consists of a series of actions that include: problem recognition, conduct of preliminary interviews, acquisition of knowledge from knowledge sources, collection, analysis, modelling, validation of the knowledge and its annotation in form of formal representation or a decision model.

2. Computational Intelligence in CAPP systems

Generally, process planning in particular setup sequencing is a NP-hard problem. In a real manufacturing environment the information available is usually imprecise. In order to model human expert process planners, application of fuzzy logic in automated process planning is necessary. Successful use of the Computational Intelligence (CI) in many scientific and engineering areas reveals that the CI techniques are applicable to process planning. The CI is a successor of Artificial Intelligence (AI). The CI is an alternative to GOFAI (Good Old-Fashioned Artificial Intelligence). The GOFAI, developed as a project of empirical research, implements a weak model of semantic networks. The CI relies rather on metaheuristic algorithms, such as fuzzy systems, artificial neural networks (ANNs), evolutionary computation, artificial immune systems, etc. Computational intelligence combines elements of learning, adaptation, evolution and fuzzy logic (rough sets) to create programs that are, in some sense, intelligent. The CAPP systems have greatly benefited from the CI methods due to their knowledge processing and logic programming capabilities. The previous state-of-the-art for application of the CI (or AI) in automated process planning is reported by Alting and Zhang [2], Huang and Zhang [3], Kiritsis [4], Lueng [5], Wang and Kusiak [6], Ahmad et al [7], Stryczek [8].

Recently, process planners have started using computational intelligent techniques, such as fuzzy logic and ANNs to part classification in group technology, features extraction, volume decomposition, machining condition

determination, machine tools selection, operations and setups sequencing, production cost estimation and manufacturing cell formation. Fuzzy logic is a powerful tool to deal with imprecise knowledge. Frequently, fuzzy values are used to describe possible values of parameters which are represented by linguistic variables. Zhang and Huang [9] used a fuzzy approach to deal quantitatively with imprecision of the process plan selection problem. Amaitik and Kiliç [10] proposed fuzzy logic model to select machining parameters in drilling and milling operation. They also used an artificial neural network to select machining operations, cutting tools and machine tools. Use of a hybrid approach of the ANNs and fuzzy logic has enabled development of a flexible CAPP system that can be trained to handle a new knowledge. Wong et al. [11] describe a fuzzy expert system and genetic algorithms for solving process selection and sequencing problem under uncertainty. Zhou et al. [12] developed a practical CAPP system. A method that hybridizes knowledge engineering, a neural network and a genetic algorithm is used to seek a global optimal process plan. Deb et al. [13] present a neural architecture for automated selection of hole machining. Knapp and Wang [14] demonstrated ability of the ANN in the process selection and within feature process sequencing. Ahmad and Haque [15] and Deb et al. [16] demonstrated potential of the back-propagation ANN approach to process selection for cylindrical surface machining. Joo et al. [17] proposed generic scheme for construction of the ANN-based Dynamic Planning Model (DPM), which consists of machine selection, feature grouping and sequencing, cutter selection, fixture selection and cutting parameter optimization. Ming and Mak [18] used Kohonen self-organizing ANN to generate setups in terms of constraints of fixture/jigs, to approach direction, feature precedence relationships, and tolerance relationships. The operation sequence problem and the setup sequence problem are mapped onto the TSP, and are solved by Hopfield ANN's. These researches take major steps towards application of advanced CI in the CAPP.

Both functionality analysis and manufacturability analysis are two vital steps during initial stage of design. Additionally, manufacturability analysis enables to perform setup generation and setup sequencing in process planning. Insufficient manufacturing knowledge generates improper sequences of operations which, in turn, may result in high production cost, unacceptable shape error and reduced tool life. Gupta et al. [19] describe dominant approaches to automated manufacturability analysis and support tools that enhance effectiveness of manufacturability analysis systems.

Design for manufacturing (DFM) is a general engineering art of designing products in such a way that they are easy to manufacture. The DFM is the process of proactively designing product to optimize all manufacturing functions: fabrication, assembly, test, procurement, shipping, delivery, service, and repair, and assure the best cost, quality, reliability, regulatory compliance, safety, time to market, and customer satisfaction [20]. Basic idea exists in almost

all engineering disciplines, but of course the details differ widely depending on a manufacturing technology. Automated manufacturability analysis is an important tool both for designers and process engineers and is very important for smooth transition from design to manufacture [21]. The CAPP can be used during development of product design to help the designer in assessing of manufacturability of the design. The designer must be provided with up-to-date knowledge on manufacturing process and tools, or must be given DFM support. The DFM metrics include usually qualitative (good practice rules, etc.) and quantitative (cost, time estimates, etc.) methods. In this work the term "manufacturability" is taken as the fuzzy term. It can be defined by membership function to a solution, which is easy to manufacture.

One from the most important issues in knowledge-based CAPP system is construction of the knowledge base that reflects experience and knowledge of domain experts [22]. Automation of process-planning task requires that reasoning patterns of human process planner, which are difficult to capture or formulate, have to be expressed in a formal way by introduction of 'manufacturing knowledge' [23]. Manufacturing knowledge acquisition is a lengthy and very hard process, because the knowledge provided by experts is usually fragmentary and inconsistent. It is often referred to as a bottleneck in knowledge-based CAPP systems development [24]. It requires a profound insight into applied engineering field, as well as into knowledge of engineering in general. The method of knowledge acquisition should allow recording of knowledge in a simple, concise, complete and clear way [25]. Emergence of the CI techniques is one from a products of great efforts which were made in the last decades to solve this problem.

A classical (2-valued) logic is often not adequate in describing expert knowledge, because experts are usually not fully confident about their statements. In fuzzy logic, a person's degree of confidence is described by a number from the interval [0,1], so that absolute confidence in a statement corresponds to 1, absolute confidence in its negation corresponds to 0, and intermediate values correspond to intermediate degrees of confidence. The application of fuzzy reasoning methods offers a structured and rule based knowledge representation similar to the expert systems approach. It enjoys a significant advantage over the expert systems in that it is characterized by ability to handle uncertainty and reason with imprecise information. Its main weaknesses are, however, its inability to automatically acquire the inference rules and problem of finding appropriate membership functions for the fuzzy variables [13]. Therefore, the methodology proposed here was supplemented with neural network, which task is to state precisely the knowledge included in the heuristic fuzzy rules.

Usage of artificial neural networks for pattern recognition is inspired both by biological nervous systems and mathematical theories of learning, information processing and control. The ANNs can be viewed as massive

parallel computing systems consisting of a large number of simple processors with many interconnections. The ANNs of non-linear elements, interconnected through adjustable weights, play a prominent role in machine learning. True advantage of the ANNs lies in their ability to represent both linear and non-linear complex input-output relationships and in their ability to learn these relationships directly from the training set. They are able to perform inference procedure with heuristic knowledge that cannot be expressed in explicit rule form. Moreover, they are error tolerant and able to approximate human reasoning in face of uncertainty. Configuration of the ANN including training is time consuming. Several experiments need to be carried out to identify the best architecture of the ANN having minimum error during training. Therefore, the ANNs topology should by uncomplicated as possible.

3. Drill hole operations sequencing

Hole making process is one of the most complex processes among all manufacturing processes [26]. For several years this problem has received more and more attention from researchers, because it is essential and the biggest problem for generation of optimal process planning [27]. A knowledge-based approach for the hole machining process selection has been reported by many researchers: Wong et al. [11], Deb et al. [13], Park [22], Kruth et al. [23], Lee and Jung [26], Hao and Ma [27], Sormaz et al. [28], Chep et al. [29], Colosimo et al. [30], Tiwari et al. [31], Sadaiah et al. [32], Xiang et al. [33], Wadatkar [34]. Another symptom of research performed in that scope are numerous revisions in such CAD/CAM modules like: *Strategy Manager* (EdgeCAM), *NC-holes* (I-DEAS), *Holemaking* (PRO/NC), *Holemaking* (UNIGRAPHICS), *Holemaking* (MASTERCAM). In particular, it is purposeful to make use of such type of software in generation of operation for expensive, labour consuming parts produced in unit or small lot cycles, having many various holes not uniformly distributed.

Setup selection and sequencing is the most significant but also difficult activity in the CAPP. A sequenced process plan is the source of information for automatic NC program generation (CAM). Ming and Mak [18] describe the difficulties in solving the setup planning problem. Solving this problem is a top priority for CAD/CAM researches and developers [35]. Therefore, different researchers adopted different advanced techniques and approaches such as feature based design [10, 24], case-based reasoning [31, 36], object oriented databases [29], space search algorithm [37] and utilized advanced computing methods, including expert system and computational intelligence [8]. Features play a vital role in both design and manufacturing process planning. However, most setup planning approaches have been proposed without appropriate consideration of machining features interaction problems. Machining feature is a

portion of raw stock removed by means of certain machining operations. An interaction between machining features occurs when cutting operation of one feature affects the subsequent machining of another feature. Volumetric interaction (i.e. features intersection) and tolerance/datum dependencies are two main groups of feature interaction. Volumetric interactions occurs when volume of two features have a non-null intersection. Volumetric interaction between machining features can be critical for setup planning in precision manufacturing. Combined effect of all feature interactions determines the operation sequence. To generate good setup plans, the issue of volumetric interaction cannot be ignored. Volumetric interactions can produce hard constraints. Hard constraints affect the manufacturing feasibility and feature sequence should be consistent whit these constraints [38]. Violation of these constraints may result in damages to workpiece or tool. Also, the sequence of setups must satisfy the machining precedence constraints between machining features. The setup plan should be based on good manufacturing practice. In this way, the part can be machined with good manufacturability, high quality, and low cost. Feghhi [39] is one of the pioneers of handling manufacturability of different hole intersection design. In this research, based on volumetric interactions of hole-hole type, metaheuristic model is created to determine bilateral precedence relationships between the machining features.

4. A knowledge-based manufacturability evaluation model

To illustrate the procedures for generating knowledge-based manufacturability evaluation model, hole making process is considered. Solution proposed here is based on the model implementing fuzzy assessments of process engineer. In this study, one assumes that the workpiece is machined on 4-axis (XYZB) horizontal machining center, and drill operations may by executed in more than one setup. This example is limited to machining of prismatic components only. In the Fig. 1 a general sketch of assessed objects is shown. It is a pair of intersecting holes. Each object from the Fig. 1 can be described with 7 element dimensional vector:

$$X_d = (d, g, w, e, l, v, u),$$

where: components d, g, w relate to assessed hole, components e, l, v relate to hole produced in the first order, whereas component u determines relative location of the holes' axes in direction of Y. The training dataset (Fig. 2) must span the total range of input patterns sufficiently well, so that the trained method can make generalizations about the data.

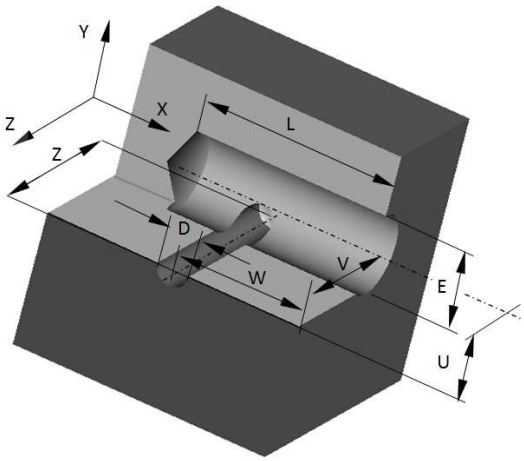

Fig. 1. Given object geometry

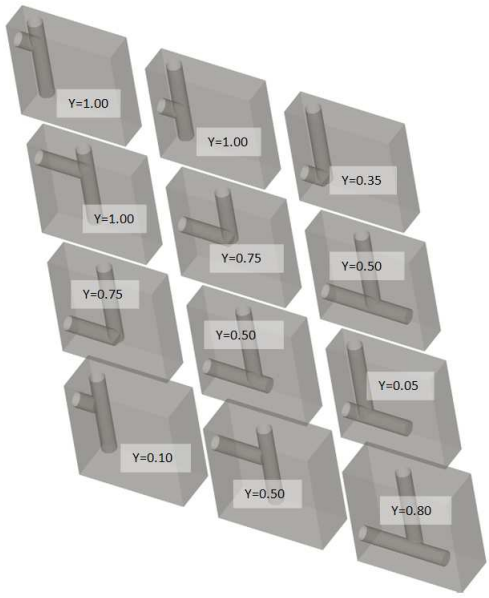

Fig. 2. Part of training set

On stage of dimensional space transformation into space of features there occurs determination for each considered object of features vector $X = (x_1, x_2, ..., x_n)$. Components x_i, of vector X are values of transforming functions, which were determined taking the following assumptions:

- x_i reach value of range [0,1],
- $x_i = 1$, in the best case,

- $x_i = 0$, in the worst case,
- the transform function is continuous.

The assumptions were dictated by advantageous properties of numerals from [0, 1] interval, and similarity of transforming functions with membership function to fuzzy set. Components x_i can be, therefore, considered as a partial membership functions to a set of objects which comply with the DFM rule. Various techniques have been proposed to determine membership functions [40]. In this research, direct estimation methods have been used. These shapes (Fig. 3) are based on expert process planners experience.

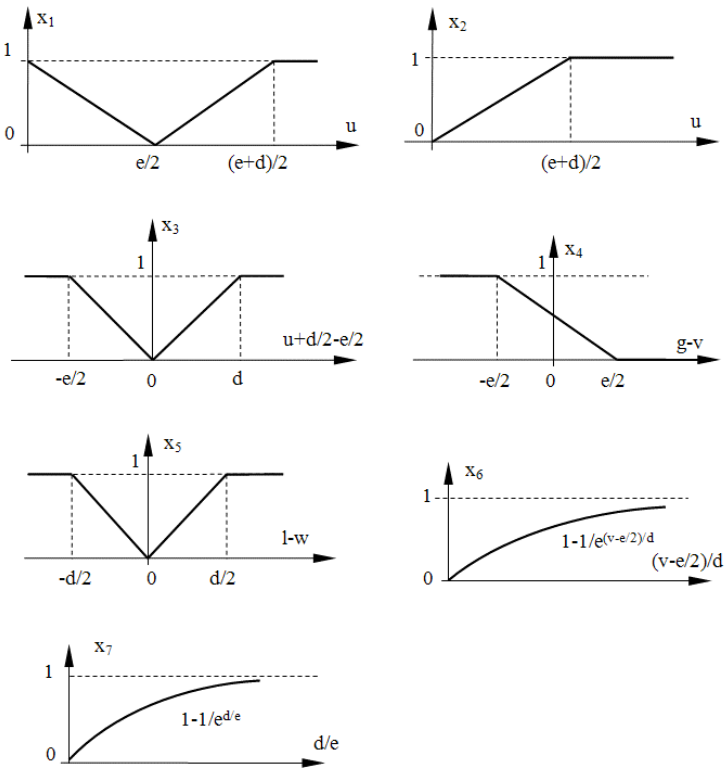

Fig. 3. Membership functions of manufacturability factors

After analysis, seven elements are provided for the X vector (Fig. 3): x_1 – machining asymmetry in plane XY, x_2 – displacement u with respect to asymmetry in ZX plane, x_3 – relative displacement of holes' edges, x_4 – relative length of produced hole, x_5 – relative length of initial hole with respect to asymmetry in XY plane, x_6 – ratio of drilling in solid material to diameter of drill, x_7 – ratio of holes' diameters.

The Fig. 4 illustrates architecture of the model for evaluation of production manufacturability of two mutually intersecting holes. In the first, fuzzy stage of assessment, based on heuristic membership functions, seven partial assessments are generated. These assessments constitute an input to the neural network, which generates the final assessment.

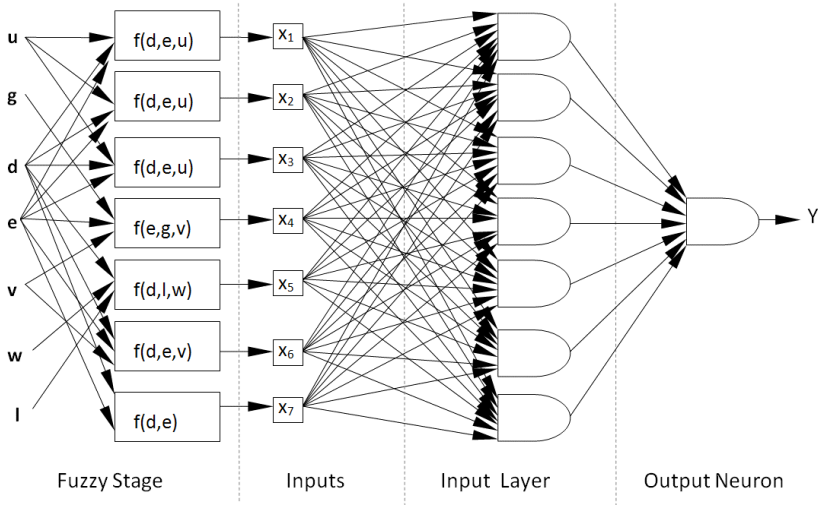

Fig. 4. Fuzzy-neural model architecture for manufacturability evaluation

The two-layer perceptron with sigmoid transfer function, has been used for determination of evaluation model. The outputs of the fuzzy stage module are organized into the input layer. The node of the ANN takes on randomized value of the weights, normalized to range between 0 and 1. The learning rate was chosen as 0.75. The momentums are fixed to 0.0. Both the elements in the input vector and output element will be transformed to take on numbers between 0 and 1. This transformation will be helpful for the convergence of learning curve. The number of 100 000 iterations is sufficient to obtain learning error δ less than 0.001 in time of 45s. The training error graph is shown in the Fig. 5.

After verification stage, classifier model can generate appropriate degrees in range of [0,1]. For each machining operation pair $\{a,b\}$ with active intersection relation is generated a degree of manufacturability, both for sequence $a \rightarrow b$, and $b \rightarrow a$. The higher degree suggests more advantageous solution. Both degrees should be used in operations and setup sequencing algorithms. In case when the both degrees are high (> 0.75), mutual interaction between machining operations *a* and *b* should not have any impact on run of machining process. If difference in the assessment is high (> 0.25), preferred sequence of machining operations should be strictly exacted. Case when the both

degrees are low (< 0.25) can be a reason to force a design change, or can require an additional setup. In other cases one should prefer a solution which is more advantageous, anyhow reversed order is allowed. Obviously, the limit values can be flexibly adjusted to a given methodology of setup design. For these results, various methodologies and algorithms have been proposed for setup planning recently. Hybrid graph theory proposed by Zhang and Lin [41] is probably the best adjusted. This theory is expected to be developed into the basic methodology for the CAPP.

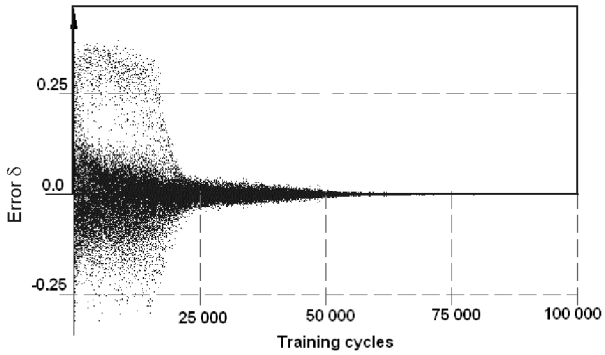

Fig. 5. Training progress of the neural networks

5. An illustrative example

The below example illustrates implementation of the developed method. In a hydraulic manifold block (Fig. 6), there may by nearly a hundred and more

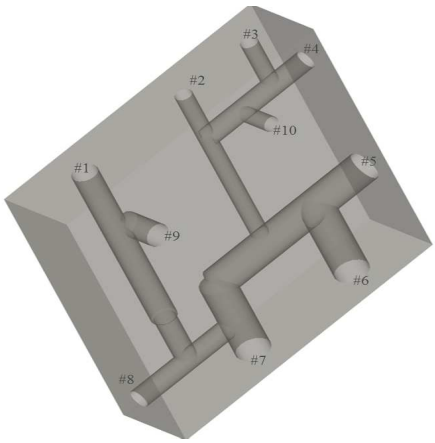

Fig. 6. A manifold hydraulic block

hole-features. In case of such components, errors in programming of machining operations can have very expensive consequences. The Table 1 shows input data and results of the ANNs. Based on these results, fuzzy precedence relationships are specified between each pair of two holes (Table 2).

Table 1. Example dataset and results

No	Seq.	D	G	W	E	L	V	U	x_1	x_2	x_3	x_4	x_5	x_6	x_7	Y
1	1,9	6	10	20	6	65	10	3	0.00	0.13	0.50	0.50	1.00	0.69	0.63	0.12
2	9,1	6	65	10	6	10	20	3	0.00	0.13	0.50	0.00	0.00	0.94	0.63	0.80
3	1,8	5	30	65	5	65	10	0	1.00	0.00	0.00	0.00	0.00	0.78	0.63	0.10
4	8,1	5	65	10	5	50	65	0	1.00	0.00	0.00	0.50	1.00	1.00	0.63	1.00
5	8,7	8	23	30	5	30	10	0	1.00	0.00	0.19	0.00	0.00	0.61	0.80	0.05
6	7,8	5	30	10	8	23	30	0	1.00	0.00	0.38	0.50	1.00	0.99	0.46	1.00
7	7,5	8	45	23	8	23	45	0	1.00	0.00	0.00	0.50	0.00	0.99	0.63	0.85
8	5,7	8	23	45	8	45	23	0	1.00	0.00	0.00	0.50	0.00	0.91	0.63	0.63
9	5.6	8	23	15	8	45	23	0	1.00	0.00	0.00	0.50	1.00	0.91	0.63	1.00
10	6,5	8	45	23	8	23	15	0	1.00	0.00	0.00	0.00	0.00	0.75	0.63	0.08
11	5,2	4	52	30	8	45	52	0	1.00	0.00	0.50	0.50	1.00	1.00	0.39	1.00
12	2,5	8	45	52	4	52	30	0	1.00	0.00	0.25	0.00	0.00	0.97	0.86	0.71
13	2,4	5	30	15	4	52	30	0	1.00	0.00	0.10	0.50	1.00	1.00	0.71	1.00
14	4,2	4	52	30	5	30	15	0	1.00	0.00	0.20	0.00	0.00	0.96	0.55	0.63
15	4,10	4	10	20	5	30	10	0	1.00	0.00	0.20	0.50	1.00	0.85	0.55	1.00
16	10,4	5	30	10	4	10	20	0	1.00	0.00	0.10	0.00	0.00	0.97	0.71	0.64
17	4,3	4	15	10	5	30	15	0	1.00	0.00	0.20	0.50	1.00	0.96	0.55	1.00
18	3,4	5	30	15	4	15	10	0	1.00	0.00	0.10	0.00	0.00	0.80	0.71	0.12

Table 2. Bilateral fuzzy precedence relationship

Hole	1	2	3	4	5	6	7	8	9	10
1	-	-	-	-	-	-	-	0.10	0.12	-
2	-	-	-	1.00	0.71	-	-	-	-	-
3	-	-	-	0.12	-	-	-	-	-	-
4	-	0.63	1.00	-	-	-	-	-	-	1.00
5	-	1.00	-	-	-	1.00	0.63	-	-	-
6	-	-	-	-	0.08	-	-	-	-	-
7	-	-	-	-	0.85	-	-	1.00	-	-
8	1.00	-	-	-	-	-	0.05	-	-	-
9	0.80	-	-	-	-	-	-	-	-	-
10	-	-	-	0.64	-	-	-	-	-	-

Based on bilateral fuzzy precedence relationship (Table 2), the preliminary weighted priority Petri net model (Fig. 7) is automatically developed. A weighted priority Petri net is a seven-tuple WPPN = (P, T, I, O, W, R, M_0), where

- $P = \{p_1,\ldots,p_m\}$ is nonempty, finite set of places (holes),
- $T = \{t_1,\ldots, t_n\}$ is nonempty, finite set of transitions (operations), disjointed of P,
- $I = \{(p, t) \in P \times T\}$ is a set of input arcs,
- $O = \{(t, p) \in T \times P\}$ is a set of output arcs,
- $W: I \rightarrow [0,1]$ is a weight arc function,
- $R: T \rightarrow [0,1]$ is a priority function,
- $M_0: P \rightarrow \{0,1\}$ is the initial marking.

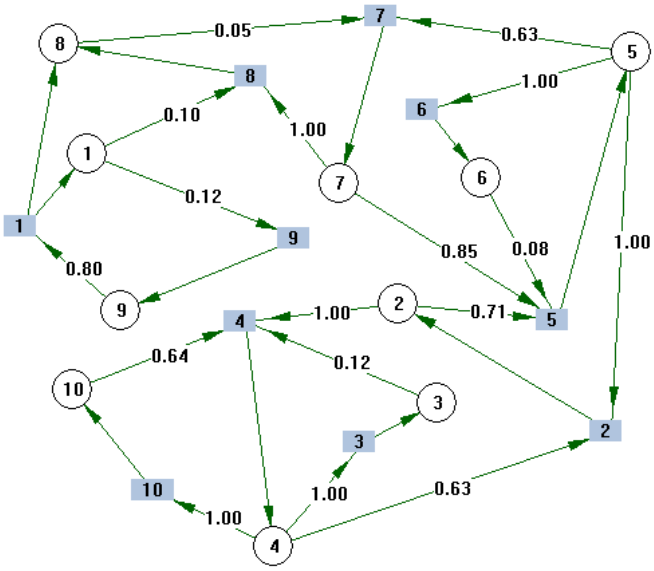

Fig. 7. Preliminary Petri net model

Model from the Fig. 7 is improper for processing. It is necessary to remove some weighted arcs in order to delete all cycles of the graph. For this purpose one needs to make the procedure below:

- select priority for each transition,
- accordingly to priority function, fire the transition and delete the weighted arcs as in the Fig. 8 for t_7.

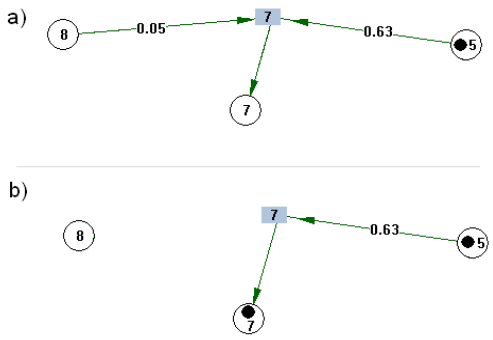

Fig. 8. Part of Petri net model used:
a) before deleting, b) after deleting t_7

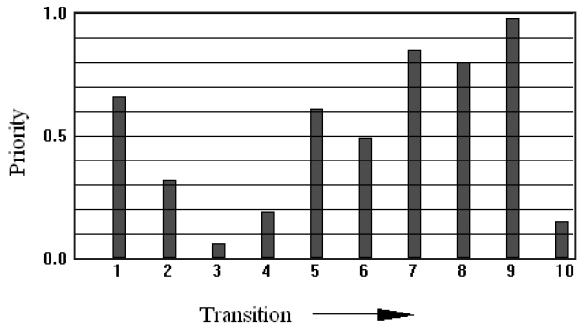

Fig. 9. The best chromosome as result of the GA

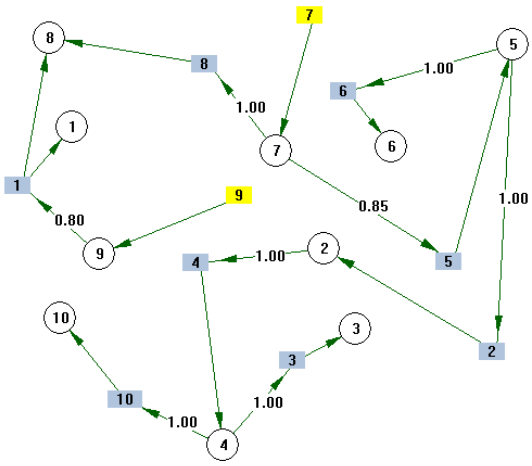

Fig. 10. The final precedence graph

Genetic Algorithm (GA) has been used to determine the optimal sequence for operations. Solution of this problem corresponds to the priority function *R*, for which the least weight of all arcs is the greatest. In the GA each chromosome is made up of $|T|$ genes. Where $|T|$ is number of elements of the set *T*. Each gene represents priority of a single transition. The Fig. 9 shows result of the GA. The Fig. 10 shows final Petri net model. This model corresponds to the operations precedence graph, from manufacturability analysis point of view.

6. Conclusion

The paper presents a knowledge acquisition approach to develop knowledge-based CAPP module for automated manufacturability evaluation system. Detailed strategy for building the hybrid, fuzzy-neural model including designing, training and verification has been outlined. The domain expertise needed for developing the module has been represented by a set of training examples and a fuzzy rules. This method offers heuristic knowledge representation, similar to the experts approach, which cannot be expressed in explicit rule form. Moreover, is able to approximate human reasoning in face of uncertainty. The work demonstrates how use the fuzzy set theory to handle imprecise knowledge in process plan generation. The method can be used to evaluate manufacturability at completion of part design and/or during design of machining process. Proposed knowledge system can be developed for automatically formulated suggestions, for how to redesign part to improve their manufacturability. This methodology is in accordance with the methods of an experienced process planner, reduces size of training set, reduces necessary number of neural network layers and saves process planning time.

References

[1] N. XU, S.H. HUANG, K. RONG: Automatic setup planning: current state-of-the-art and future perspective. *Int. Journal of Manufacturing Technology and Management*, **11**(2007)2, 103-208.

[2] L. ALTING, H.C. ZHANG: Computer aided process planning: the state-of-the-art survey. *Int. Journal of Production Research*, **27**(1989), 553-585.

[3] S.H. HUANG, H.C. ZHANG: Neural-hybrid approach for intelligent manufacturing: a survey. *Computers in Industry*, **26**(1995), 107-126.

[4] D. KIRITSIS: A review of knowledge-based expert systems for process planning. Methods and Problems. *Int. Journal of Advanced Manufacturing Technology*, **10**(1995), 240-261.

[5] H.C. LEUNG: Annotated bibliography on computer-aided process planning. *Int. Journal of Advanced Manufacturing Technology*, **12**(1996), 309-329.

[6] J. WANG, A. KUSIAK (ed.): Computational intelligence in manufacturing handbook. Boca Raton: CRC Press LLC; 2001.
[7] N. AHMAD, A.F.M.A. HAQUE, A.A. HASIN: Current trend in computer aided process planning. Proc. Int. Conf. The Institution of Engineers, Bangladesh 2001, 81-92.
[8] R. STRYCZEK: Computational intelligence in computer aided process planning – a review. *Advances in Manufacturing Science and Technology*, **31**(2007)4, 77-92.
[9] H.C. ZHANG, S.H. HUANG: A fuzzy approach to process plan selection. *Int. Journal of Production Research*, **32**(1994)6, 1265-1275.
[10] S.M. AMAITIK, S.E. KILIÇ: An intelligent process planning system for prismatic parts using STEP features. *Int. Journal of Advanced Manufacturing Technology*, **31**(2007), 978-993.
[11] T.N. WONG, C.F. CHAN, H.C.W. LAU: Machining process sequencing with fuzzy expert system and genetic algorithms. *Engineering with Computers*, **19**(2003), 191-202.
[12] X. ZHOU, Y. QIU, G. HUA, H. WANG, X. RUAN: A feasible approach to the integration of CAD and CAM. *Computer-Aided Design*, **39**(2007), 324-338.
[13] S. DEB, K. GHOSH, S.R. DEB: Machining process planning for rotational components by using a neural network approach. Proc. 29th Int. Conference on Computers and Industrial Engineering, Montreal 2001.
[14] G.M. KNAPP, H.P. WANG: Acquiring, Storing and utilizing process planning knowledge using neural networks. *Journal of Intelligent Manufacturing*, **5**(1992), 333-344.
[15] N. AHMAD, A.F.M.A. HAQUE: Artificial neural network based process selection for cylindrical surface machining. Proc. Int. Conf. on Manufacturing, ICM 2002, Dhaka 2002, 321-326.
[16] S. DEB, K. GHOSH, S. PAUL: A neural network based methodology for machining operations selection in computer-aided process planning for rotationally symmetrical parts. *Journal of Intelligent Manufacturing*, **7**(2006), 557-569.
[17] J. JOO, S. PARK, H. CHO: Adaptive and dynamic process planning using neural networks. *Int. Journal of Production Research*, **39**(2001)2, 2923-2946.
[18] X.G. MING, K.L. MAK: Intelligent setup planning in manufacturing by neural networks based approach. *Journal of Intelligent Manufacturing*, **11**(2000), 311-331.
[19] S.K. GUPTA, D. DAS, W.C. REGLI, D. NAU: Automated manufacturability analysis: a survey. *Research in Engineering Design*, **9**(1997)3, 168-190.
[20] D.M. ANDERSON: Design for manufacturability & concurrent engineering. *CIM Press*, 2006.
[21] J. MADAN, P.V.M. RAO, T.K. KUNDRA: Computer aided manufacturability analysis of die-cast parts. *Computer Aided Design & Application*, **4**(2007), 147-158.
[22] S.C. PARK: Knowledge capturing methodology in process planning. *Computer-Aided Design*, **35**(2003), 1109-1117.
[23] J.P. KRUTH, J. DETAND, G. VAN ZEIR, J. KAMPENAERS, J. PINTE: Methods to improve the response time of CAPP system that generate non-linear process plans. *Advances in Engineering Software*, **25**(1996), 9-17.

[24] H. XING, S.H. HUANG, J. SHI: Rapid development of knowledge-based systems via integrated knowledge acquisition. *Artificial Intelligence for Engineering Design, Analysis and Manufacturing*, **17**(2003), 221-234.
[25] C. GRABOWIK, R. KNOSALA: The method of knowledge representation for a CAPP System. *Journal of Materials Processing Technology*, **133**(2003), 90-98.
[26] K.H. LEE, M.Y. JUNG: Flexible process sequencing using Petri net theory. *Computers & Industrial Engineering*, **28**(1995)2, 279-290.
[27] Y. HAO, J. MA: A knowledge-based auto-reasoning methodology in hole-machining process planning. *Computers in Industry*, **57**(2006), 297-304.
[28] D.N. SORMAZ, P. KHURANA, A. WADATKAR: Rule-based process selection of hole making operation for integrated process planning. Proc. ASME 2005 Int. Design Engineering Technical Conferences & Computers and Information in Engineering Conference, Long Beach, DETC2005-85062.
[29] A. CHEP, L TRICARICO, P. BOURDET, L. GALANTUCCIO: Design of object-oriented database for the definition of machining operation sequences of 3D workpieces. *Computers & Industrial Engineering*, **34**(1998)2, 257-279.
[30] B.M. COLOSIMO, Q. SEMERARO, T. TOLIO: Rule based system for non linear process plan generation. *Studies in Informatics Control*, **9**(2000)2 133-143.
[31] M.K. TIWARI, K. RAMA KOTAIAH, S. BHATNAGAR: A case-based computer-aided process-planning system for machining prismatic components. *Int. Journal of Advanced Manufacturing Technology*, **17**(2001), 400-411.
[32] M. SADAIAH, D.R. YADAV, P.V. MOHANRAM, P. RADHAKRISHAN: A generative computer-aided process planning system for prismatic components. *Int. Journal of Advanced Manufacturing Technology*, **20**(2002), 709-719.
[33] W. XIANG, C.W. CHUEN, C.M. WONG, L.H. YAM: A generative feature-based system for hydraulic manifold blocks. *Int. Journal of Advanced Manufacturing Technology*, **19**(2002), 805-811.
[34] A. WADATKAR: Process selection for hole operations using rule based approach. *Thesis*, Ohio University (2004).
[35] S.H. HUANG, N. XU: Automatic set-up planning for metal cutting: an integrated methodology. *Int. Journal of Production Research*, **41**(2003)18, 4339-4356.
[36] S. CHAMPATI, W.F. LU, A.C. LIN: Automated operation sequencing in intelligent process planning: A case-based reasoning approach. *Int. Journal of Advanced Manufacturing Technology*, **12**(1996), 21-36.
[37] D.N. SORMAZ, B. KHOSHNEVIS: Generation of alternative process plans in integrated manufacturing systems. *Journal of Intelligent Manufacturing*, **14**(2003), 509-526.
[38] Z. LIU, L. WANG: Sequencing of interacting prismatic machining features for process planning. *Computers in Industry*, **58**(2007), 295-303.
[39] S.J. FEGHHI: A learning approach toward integration of design and process planning. MS thesis, School of Electrical Engineering, West Lafayette, IN 1989.
[40] I.B. TURKSEN: Measurement of membership functions and their acquisition. *Fuzzy Sets and Systems*, **40**(1991), 5-38.
[41] H.C. ZHANG, E. LIN: A hybrid-graph approach for automated setup planning in CAPP. *Robotics and Computer-Integrated Manufacturing*, **15**(1999), 89-100.

Received in February 2011