GEOMETRIC ACCURACY OF AIRCRAFT ENGINE BLADE MODELS CONSTRUCTED BY MEANS OF THE GENERATIVE RAPID PROTOTYPING METHODS FDM AND SLA

Grzegorz Budzik

S u m m a r y

The article presents an analysis of the incremental model building process in the RP methods (FDM and SLA) with regard to the accuracy of construction of aircraft engine blade prototypes. The influence of the orientation of the blade model in the workspace of RP devices on its geometric accuracy has been studied based on a blade model made in the 3D-CAD (Mechanical Desktop) system and converted to the STL format with the surface accuracy of 0,005mm. The study disregarded the impact of data conversion in CAD on the model geometric accuracy. The examined blades were constructed using two rapid prototyping methods: FDM and SLA. The first part of the article constitutes a theoretical analysis of the influence of the model orientation in the device workspace and the RP layer thickness on the prototype geometric accuracy. Than the real geometric accuracy of the produced blade prototypes is determined utilizing the coordinate measuring machine.

Keywords: rapid prototyping, aircraft engine blade, geometric accuracy

Dokładność geometryczna modeli łopatek silników lotniczych wytwarzanych przyrostowymi metodami szybkiego prototypowania FDM i SLA

S t r e s z c z e n i e

W pracy omówiono analizę przyrostowego procesu budowy modelu w metodach RP (FDM i SLA) z uwzględnieniem dokładności wykonania prototypu łopatki turbiny silnika lotniczego. Prowadzono badania oceny wpływu położenia modelu łopatki w przestrzeni roboczej urządzeń RP na jej dokładność geometryczną. Obiektem badań był model łopatki wykonany w systemie 3D-CAD (Mechanical Desktop) i wyeksportowany do formatu STL z dokładnością powierzchniową 0,005 mm. W analizie nie uwzględniono wpływu procesu przetwarzania danych w środowisku CAD na dokładność geometryczną modeli. Modele łopatki wykonano dwiema metodami szybkiego prototypowania: FDM i SLA. Przeprowadzono analizę teoretyczną wpływu położenia modelu w przestrzeni roboczej urządzenia RP i grubości warstwy na dokładność geometryczną prototypu. Pomiary prowadzono za pomocą współrzędnościowej maszyny pomiarowej celem określenia rzeczywistej dokładności geometrycznej wykonanych prototypów łopatek.

Słowa kluczowe: szybkie prototypowanie, łopatki turbiny silników lotniczych, dokładność geometryczna

Address: Grzegorz BUDZIK, Ph.D. Eng., Rzeszów University of Technology, Department of Machine Design, ul. W. Pola 2, 35-959 Rzeszów, phone +48 17 865 1642, fax +48 17 865 1155, e-mail: gbudzik@prz.edu.pl

Introduction

The rapid prototyping process consists of four stages whose conditions affect the accuracy of physical models: 3D-CAD modelling, 3D-CAD/3D-RP data conversion, model construction using an RP device, prototype finishing [1-3].

Both 3D-CAD modelling and data conversion occur in a software environment, where it is also possible to eliminate the majority of model geometric defects using numerical operations. The final phase of the process consists in dividing the numerical model into layers whose thickness depend on the technological capabilities of the RP device. Layer thickness determines the model geometric accuracy towards the vertical axis (z) of the RP device. For this reason, it is particularly important that the model be placed in the RP device workspace in such a way that the layer thickness has the least influence on the model accuracy. It is most significant in the rapid prototyping of aircraft engine blades demonstrating a high degree of measurement and shape accuracy [4-9].

Theoretical analysis of model accuracy in the RP generative production process

Every generative method of rapid prototyping allows for the model to be produced with defined accuracy. The accuracy of the model is determined by both the applied method, the RP device, and the course of the technological process (e.g. the assumed layer thickness). The layered structure of the model, typical of generative processes, is the primary source of both geometric deviations and surface roughness. Layer thickness also has a considerable influence on the model accuracy, especially in the case of curvilinear surfaces whose angle of inclination towards the working platform varies (Fig. 1).

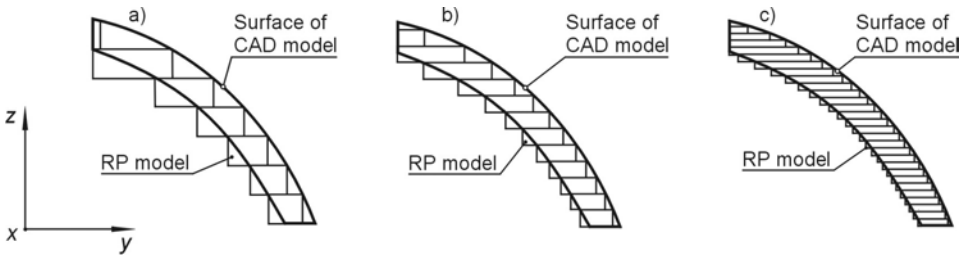

Fig. 1. Influence of layer thickness on model surface accuracy:
a) thickness 0,15 mm, b) thickness 0,1 mm, c) thickness 0,05 mm

For models constructed by incremental RP methods, depending on the intended finishing, the following tolerances are assumed: negative, positive or

mixed (Fig. 2). The finishing of the model depends on the workability of the material used in the RP method. Since polymeric materials are characterized by good workability, for models produced with the use of polymers, all types of tolerance are applied. Tolerance depends on prototype shape. For elements of curvilinear surface, tolerance is usually defined by the distance from the adopted point of the CAD model outline and the point of the physical model situated on the normal straight line to the CAD model outline [10-12].

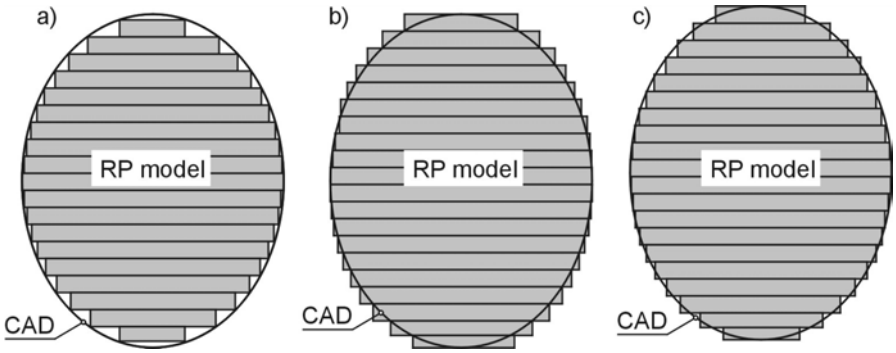

Fig. 2. Generative model tolerance vs. the CAD model: a) negative, b) positive, c) mixed

Interrelationships between the layer thickness and other geometric parameters of the models have been determined in the model section along the *z* axis (Fig. 3). These interrelationships take the following forms:

- for an external flat oblique surface (Fig. 3a):

$$\delta = h \cdot \sin\gamma \tag{1}$$

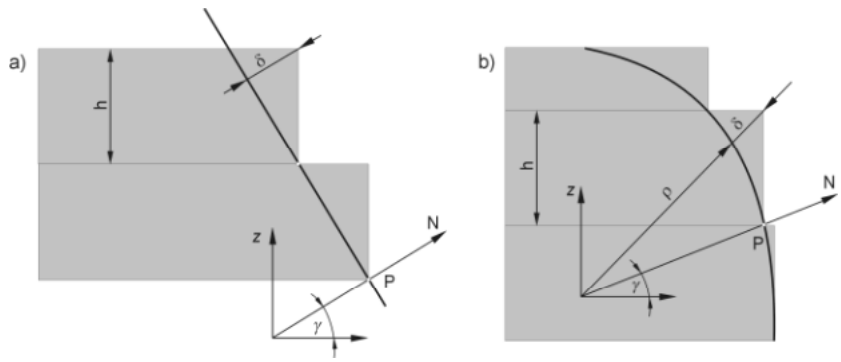

Fig. 3. Geometric interrelations in the model layers for the following types of surface: a) flat, b) curvilinear

- for an external curvilinear surface (Fig. 3b):

$$\delta = -\rho + \sqrt{\rho^2 + h^2 + 2 \cdot h \cdot \sin\gamma} \tag{2}$$

where: $P(x,y,z)$ – the coordinates of the point on the CAD model surface, δ – the distance between the point of the model layer and the point on the curve, ρ – curve radius, h – layer thickness, N – normal vector in the P point of the surface.

Blade Test Model Construction

Tests were carried out on a specially constructed blade model. The 3D-CAD test model system of coordinates was joined with the midpoint of the blade positioning upper surface (Fig. 4). Such a system of coordinates was a basis for a precise identification of the model in the software space of the coordinate measuring machine. Fixing element that enables a fast and accurate positioning of the model for measurement is the bottom part of the blade constitutes.

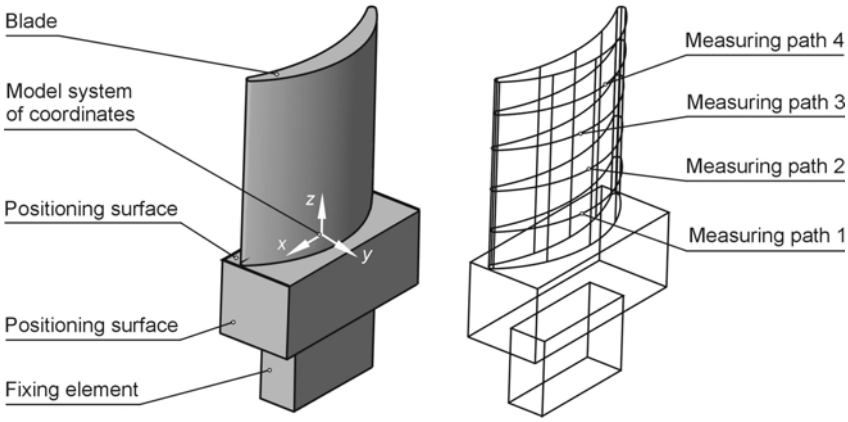

Fig. 4. Test blade measuring model

The prototypes were made using two RP methods: FDM and SLA in three orientations on the RP device working platform (Fig. 5). The model geometric accuracy towards the z axis depends on the thickness of the layers being built up. The layer thickness is set prior to the process activation. For blade models produced by the SLA method, the adopted layer thickness was 0,1 mm. For the FDM method, the layer thickness was 0,254 mm. In the case of both methods, the construction of the model begins with the building of a supporting structure

[11-14]. Its aim is to fix the model to the working platform and to prop the model elements exposed to deformation by gravitation (Fig. 6).

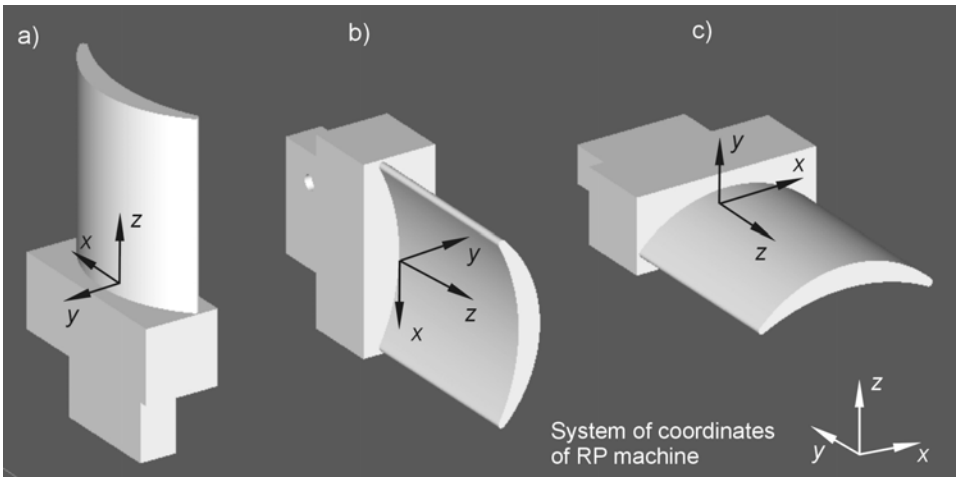

Fig. 5. Blade orientation in the RP device virtual workspace: a) vertical, b) lateral, c) horizontal

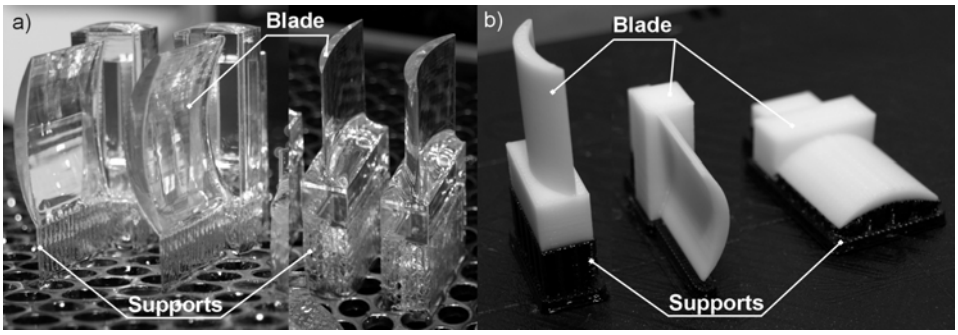

Fig. 6. Test models on the working platform of: a) the SLA device, b) the FDM device

In the SLA method, the supports are made of the same material as the model, and removed mechanically, which may cause the occurrence of additional model shape deviations. In the FDM method, the supports are dissolved in a mixture of water and detergent. Thanks to this, the finishing is not necessary.

Blade test models measurements

The real geometric accuracy has been determined by direct measurements of blade prototypes utilizing the coordinate measuring machine WENZEL LH

87 (Fig. 7) equipped with the tactile scanning head Reinshaw. The measurements were taken along the measuring paths in four sections, each 5 mm away from another (Fig. 4).

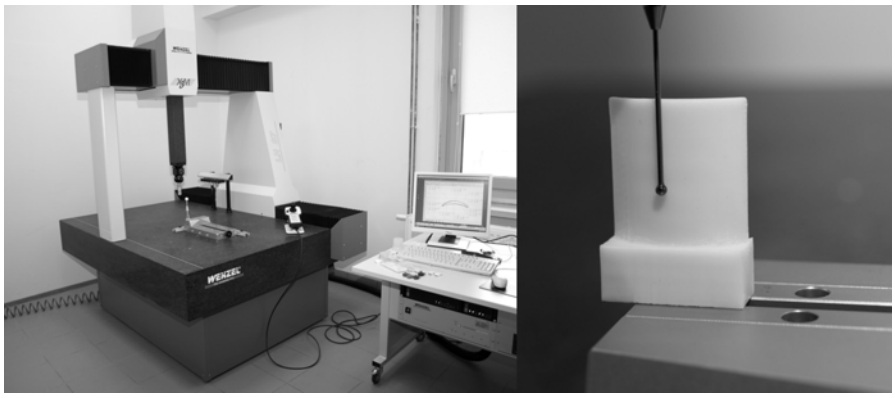

Fig. 7. Blade measurement with the use of the WENZEL LH87 machine: a) main view, b) blade measurement

The measurement results of the most accurate SLA and FDM blade models have been presented graphically in the form of measurement protocols (Fig. 8-11). A protocol shows the deviation values graphically as a deviation

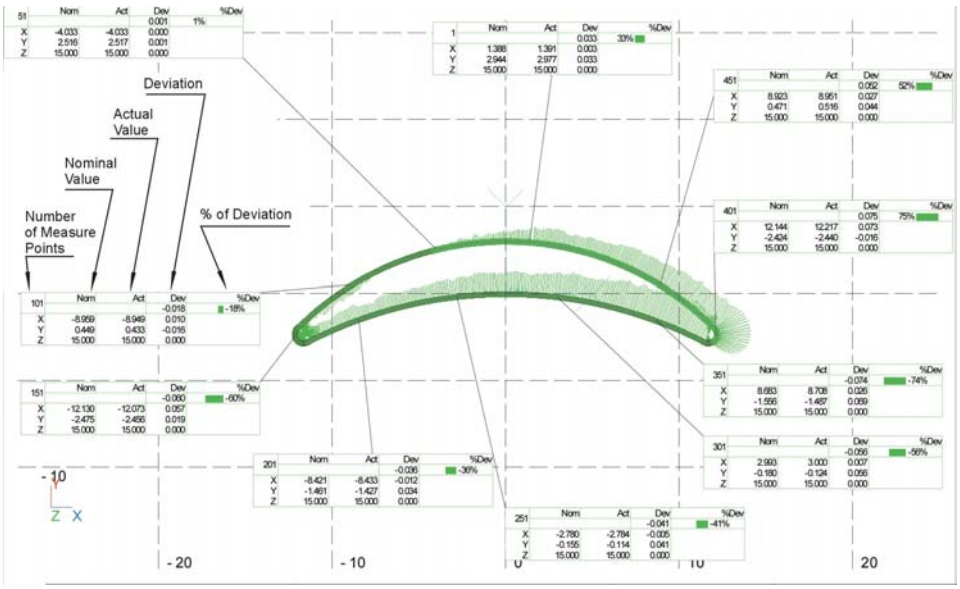

Fig. 8. SLA blade measurement protocol (vertical face)

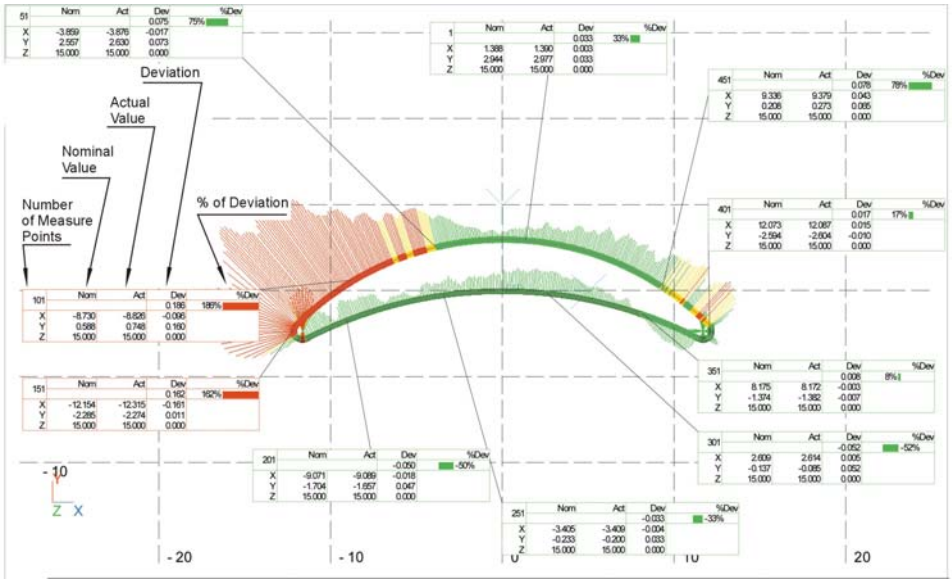

Fig. 9. SLA blade measurement protocol (lateral face)

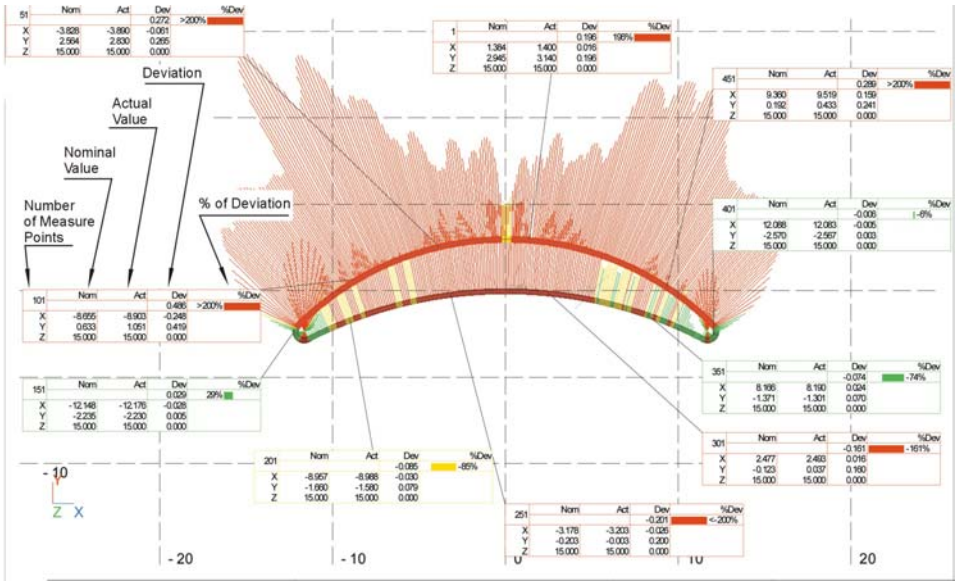

Fig. 10. SLA blade measurement protocol (horizontal face)

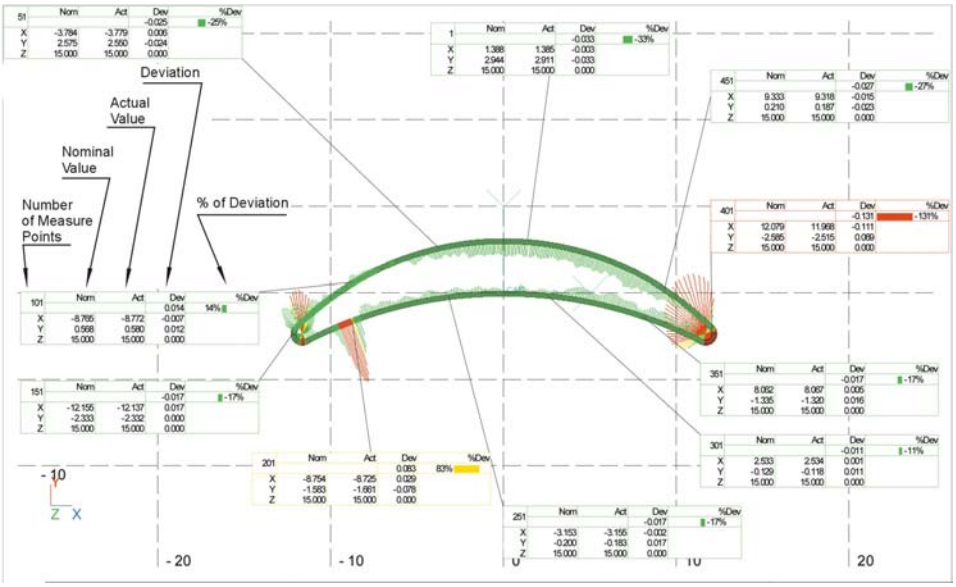

Fig. 11. FDM blade measurement protocol (vertical face)

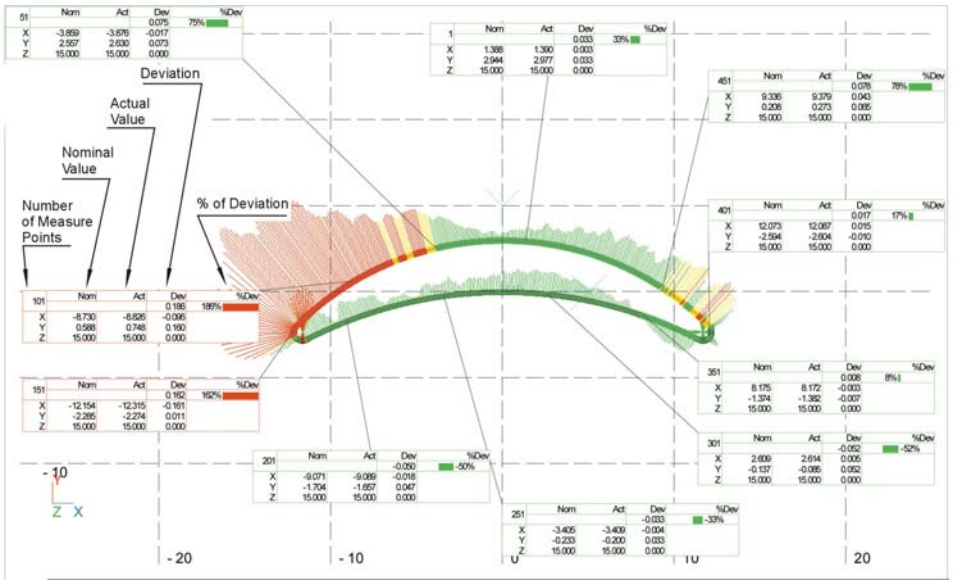

Fig. 12. FDM blade measurement protocol (lateral face)

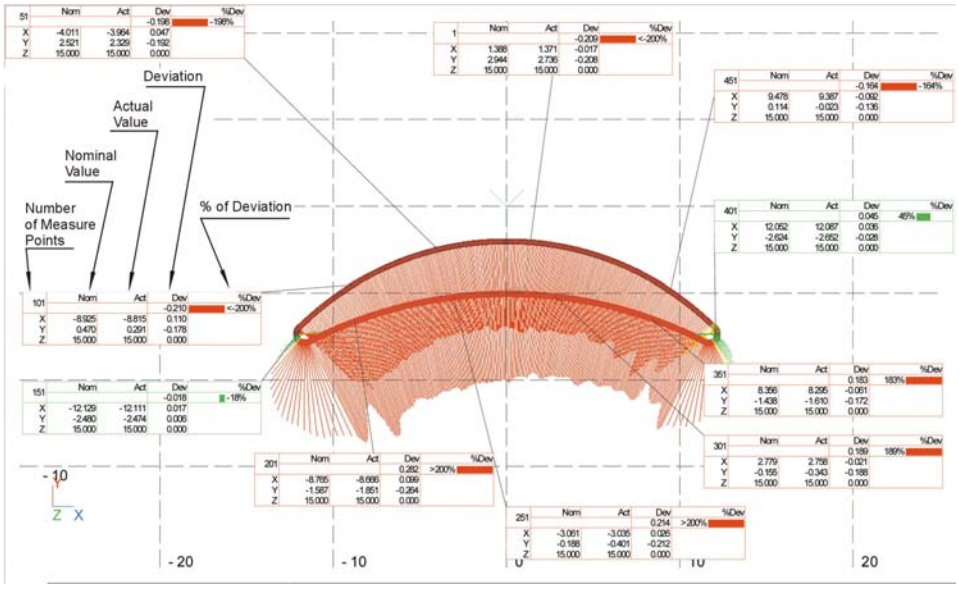

Fig. 13. FDM blade measurement protocol (horizontal face)

vector of proper direction. Additionally, in selected measurement points, there are tables showing detailed values of deviation in the *x*, *y* and *z* axes from the 3D-CAD nominal model.

Conclusions

An analysis was made on the basis of the measurement results of test blade models produced by the SLA and FDM methods, by means of the coordinate measuring machine.

The first blade SLA model was constructed in an orientation where *z* the axis of the blade was parallel to *z* the axis of the device (vertical face). The measurement results indicate that this blade demonstrates high accuracy. The defined deviations do not exceed the value of the assumed tolerance field ±0,1 mm (Fig. 8). It was found that the model is characterized by the highest accuracy among the tested prototypes. The second model, whose *x* axis is parallel to the *z* axis of the device (lateral face) displays good accuracy, with the occurrence of frequent yet insignificant cases of the assumed tolerance value being exceeded (Fig. 9). The third model, whose *y* axis is parallel to the *z* axis of the device (horizontal face), exhibits poor accuracy and the assumed tolerance value is noticeably exceeded in the whole model (Fig. 10).

The first blade FDM model was manufactured in an orientation where the *z* axis of the blade was parallel to the *z* axis of the device (vertical face). The

model was rated as one of high accuracy. Only local minor departures from the assumed tolerance value were identified (Fig. 11). It was established that the model demonstrates the highest accuracy among the tested FDM prototypes. The second model, whose *x* axis is parallel to the *z* axis of the device (lateral face), is accurate with instances of exceeding the assumed tolerance value (Fig. 12). The second model, whose *y* axis is parallel to the *z* axis of the device (horizontal face) exhibits a low degree of accuracy and the assumed tolerance value is noticeably exceeded in the whole model (Fig. 13).

The orientation of the FDM and SLA models in the workspace of RP devices is crucial to the geometric accuracy of blade prototypes. The reason for this is the layered structure of the model typical of incremental of RP methods. Blade models in which the *z* axis is parallel to the *z* axis of the device demonstrate the best accuracy. The blade FDM and SLA models whose *x* axis is parallel to *z* the axis of the device have good accuracy. Blade models whose *y* axis is parallel to the *z* axis of the device are marked by poor accuracy. Therefore, the construction of blade prototypes in such an orientation is not recommended.

The present study was financed from resources of MNiSzW as part of the PBZ-MNiSW-03/I/2007 project.

References

[1] A. GEBHARDT: Rapid Prototyping. Carl Hanser Verlag, Munich 2003.
[2] G. BUDZIK: Odwzorowanie powierzchni krzywoliniowej łopatek części gorącej silników lotniczych w procesie szybkiego prototypowania. Oficyna Wydawnicza Politechniki Rzeszowskiej, Rzeszów 2009.
[3] W. LIOU: Rapid Prototyping and engineering applications – a toolbox for prototype development. Taylor & Francis Group, New York 2008.
[4] P. ALEXANDER, A. SETH, D. DUTTA: Part orientation and build cost determination in layered manufacturing. *Computer Aided Design*, **30**(1998)5.
[5] J. SIENIAWSKI: Kryteria i sposoby oceny materiałów na elementy lotniczych silników turbinowych, Oficyna Wydawnicza Politechniki Rzeszowskiej, Rzeszów 1995.
[6] G. BUDZIK: The analysis of the possibility of the application of the casting waxes in the process RP. *Archives of Foundry Engineering*, **9**(2009)2.
[7] G. BUDZIK, H. MATYSIAK, J. PACANA, M. CYGAR: The analysis of chosen methods of Rapid Prototyping of casting models for blades of aircraft engines. *Combustion Engines*, SC1, 2009.
[8] J. JASKÓLSKI, G. BUDZIK, M. GRZELKA, M. OLEKSY: Three dimensional scanning of geometry of blade aircraft engine with non-contact measuring methods. *Combustion Engines*, SC1 (2009).

[9] G. BUDZIK: The selection criteria of scanning method in process of reproducing an aircraft engine blade geometry. *Archives of Mechanical Technology and Automation*, **27**(2007)2.
[10] G. BUDZIK: Surface roughness of aircraft engine blade models produced with various methods of rapid prototyping. *Journal of KONES Powertrain and Transport*, **14**(2007)2.
[11] M. SOBOLAK, G. BUDZIK, P.E. BORAWSKA: Wybrane aspekty dokładności stereolitografii. *Acta Mechanica Slovaca*, 3-A(2008).
[12] G. BUDZIK: Properties of made by different methods of RP impeller foundry patterns, *Archives of Foundry Engineering*, **7**(2007)2, 83-86.
[13] Z. GAJDOŠ, J. SLOTA, E. SPIŠÁK: Visualization of FDM prototypes ICAT 2008, Proc. 2nd Inter. Conference on Additive Technologies: DAAAM Specialized Conference, Ptuj 2008.
[14] I. GAJDOŠ, J. SLOTA, E. SPIŠÁK: FDM prototypes virtual modeling, ICAT 2008, Proc. 2nd International Conference on Additive Technologies: DAAAM Specialized Conference, Ptuj 2008.

Received in February 2010