TECHNOLOGICAL SETUPS OF THE GLEASON PHOENIX CNC SPIRAL BEVEL AND HYPOID GEAR MILLING MACHINES

Piotr Skawiński

S u m m a r y

The paper contains the description of basic technological setups for conventional milling machines and for 6-axes CNC machines for Gleason spiral bevel and hypoid gears. Cartesian reference system are discussed for Gleason's series Phoenix CNC machines. Numerically controlled machines allow cut and grind the generated and formate spiral and hypoid bevel gears in all technological methods.

Keywords: spiral bevel gear, machine setup, CNC machines

Nastawy technologiczne frezarek Gleason Phoenix CNC do obróbki kół stożkowych i hipoidalnych o kołowo-łukowej linii zęba

S t r e s z c z e n i e

W opracowaniu przedstawiono podstawowe nastawy technologiczne frezarek konwencjonalnych oraz 6-osiowych obrabiarek CNC stosowanych do obróbki kół zębatych stożkowych i hipoidalnych kołowo-łukowych według metody Gleasona. Podstawą opracowania nastaw jest kinematyka obrabiarek CNC firmy Gleason serii Phoenix. Wykazano, że obrabiarki sterowane numerycznie pozwalają na skrawanie i szlifowanie generowanych numerycznie i kształtowanych kół stożkowych i hipoidalnych o kołowo-łukowej linii zęba przy użyciu wszystkich metod technologicznych obróbki.

Słowa kluczowe: koła zębate stożkowe, ustawienie maszyny CNC, obrabiarki CNC

1. Introduction

Spiral bevel and hypoid formate or generated gears are cutted on the milling machines based on technological setups [1]. The setup values of concrete machine are calculated based on the basic technological calculations. There are two types of technological setups: first – with flat crown gear and second – with cone crown gear. The cone crown gear represents very closely geometry of designing gear (Fig. 1). For the flat crown gears are used machine which cutter axis is parallel to the cradle axis. In the second case, machines have to equipped

Address: Piotr SKAWINSKI, PhD. Eng., Warsaw University of Technology, Faculty of Automotive and Construction Machinery Engineering, 02-524 Warsaw, Narbutta 84, psk@simr.pw.edu.pl

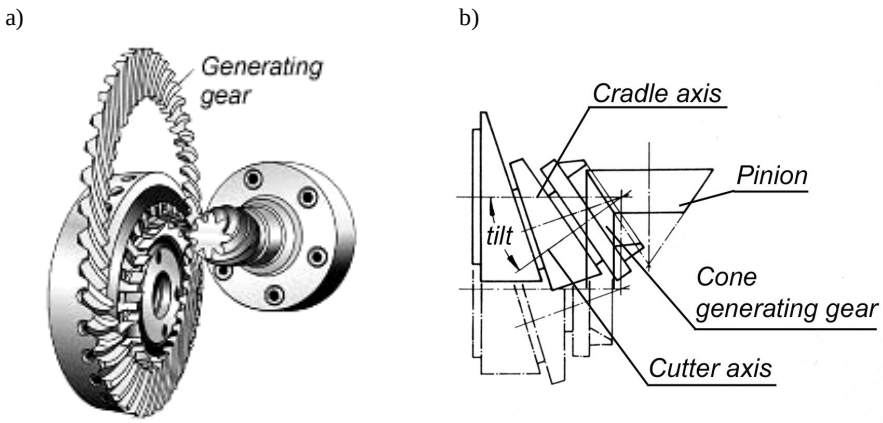

Fig. 1. Generating gear: flat crown gear (a), cone crown gear (b)

with tilted cutter axis. Those solutions are typical for the conventional machines [2] (Fig. 2). The new generation of conventional machine as for example G102, G116, G118, G613 (not produced at present), allow to realize cone crown gears and flat crown gears. Such machine as G26 and similar, which have cutter axis parallel to cradle axis, allow to realize in the machine space the flat crown gears only. Those machines (for example G26) are equipped in modified roll mechanism which is used in cutting of the pinions for generated and formate gears. The machines with cutter tilt are used as well as machines produced in the machine space, flat crown gears and cone crown gears. In bevel gear technology, independently from technological system, but dependently from technological method, technological setup is supported on flat or cone crown gear. The conventional machine with cutter tilt can realize in their work spaces flat and cone crown gears, in opposite to machine without cutter tilt which represent in work space flat crown gear only. The first CNC machine which was made by Gleason and all geometrical magnitudes had to be set by hand when setting up the machine. The basic concept of the machine was the same as classical design (Fig. 3) [3]. Oerlikon and Klingelnberg machines had a corresponding design concept like the first Gleason machines but provided all kinematic relations with electronic drives. Those machines in their work space allow to realize technological setup with flat and cone crown gear. The basic idea of CNC machines is shown on the Fig. 4. Elements number 2 and 3 represent X and Y axes of a Cartesian coordinate and change the position during motions cutting in order to imitate a generating cradle. Such positioning of the Cartesian system is consistent with recommendation, that the Z axis is parallel to the axis of cutter spindle. The cutter head tilt is a very important basic setup value for Gleason and Oerlikon methods. Overall, the three Cartesian axes are related to the tool (cutter head, cradle), and also three axes define the position of the workpiece.

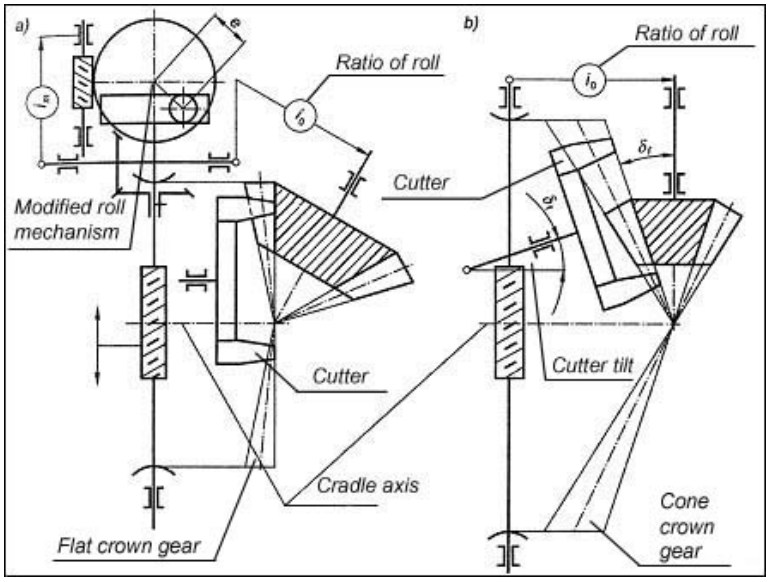

Fig. 2. Generating gear for conventional machine: a) flat crown gear – cradle axis parallel to cutter axis, b) cone crown gear – cradle axis is not parallel to cutter axis [2]

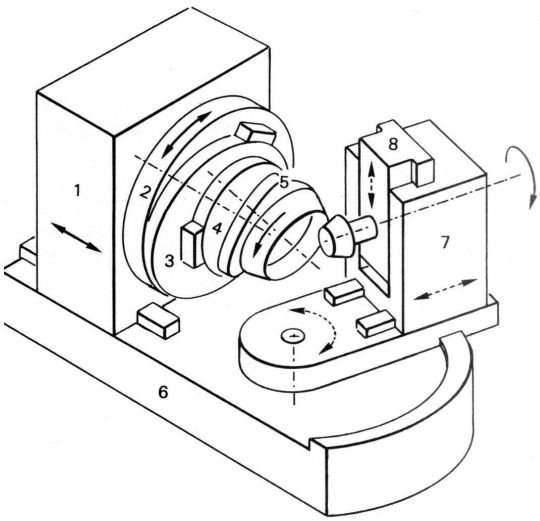

Fig. 3. The schema of conventional machine kinematic structure:
1 – cradle body, 2 – cradle, 3 – eccentrity, 4 – swivel, 5 – tilt,
6 – frame, 7 – workpiece spindle, 8 – hypoid offset [3]

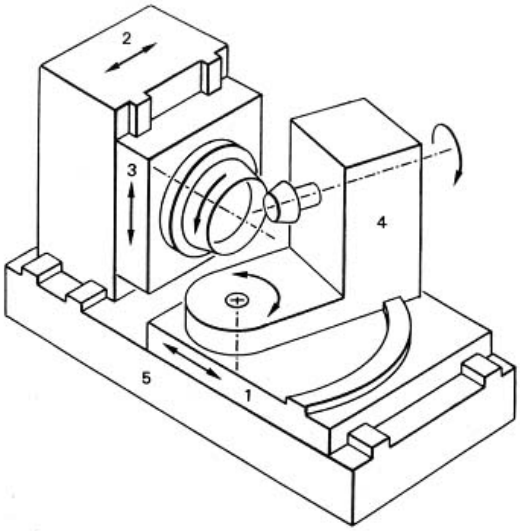

Fig. 4. The schema of CNC machine kinematic structure: 1 – Z sliding base, 2 – X slide, 3 – Y slide, 4 – spindle stock, 5 – machine base [3]

2. Technological settings

Generated and formate (non generated) gears can be cutted on the machine without or with cutter tilt. Machines which have not tilted cutter spindle, the cradle axis and cutter axis are parallel and in the work space there is the flat crown gear (Fig. 5) [4-7].

The technological setup on the CNC machine is the same as on conventional machine and doesn't make any difficulties in technical realization by numerically controlled system. Figure 5 shows an idea of technological setup with flat crown generating gear.

Based on the analysis of basic technological setup (Fig. 5) it is necessary to define at the beginning some important points. Point O_M is the machine center. Point O_G is on the cutter axis at the plane tangent to the top of blades. Point O_{PO} is located on the pinion (gear) axis and is the top point of pitch cone. These three points allow to define the following settings:

- cradle angle $\boldsymbol{q}$ in the XY plane (cradle plane) defined by radial setting $\boldsymbol{U}$ and X axis,
- radial setting $\boldsymbol{U}$ as a distance in the cradle plane (XY plane) from machine center O_M to cutter center O_G,
- root angle $\boldsymbol{\delta_M}$ in the horizontal (XZ) plane formed by work axis and cradle plane XY,

• work offset a_M as the distance between the cradle axis and work-piece axis. This distance is measured up or down to machine center O_M,

• head setting ΔX_P the distance in the XZ plane measured along work axis between O_M point and O_{PO}. Point O_{PO} is the crossing point of work axis and parallel line to the Z axis in a_M distance and perpendicular to Y axis,

• sliding base ΔX_b as a distance between machine center O_M and point O_{PO} in perpendicular direction to the cradle plane.

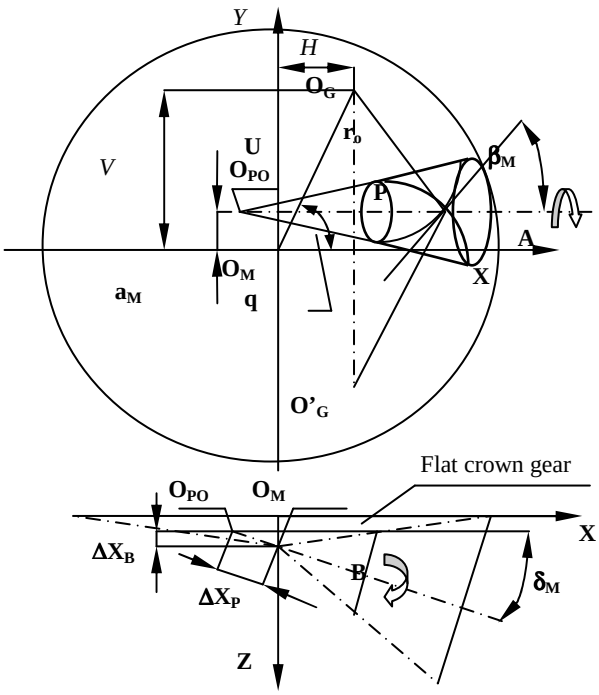

Fig. 5. An idea of flat crown gear

Point O_G moves in the XY plane according to circular interpolation with tangent velocity of cutting feed. The circular movement of point O_G and pinion (gear) rotates around its axis and represent generating motion which equal to decimal ratio of roll. This motion is controlled by CNC controller as a relationship of the angular displacement of cone or flat crown gear and milled pinion or gear.

Basic technological settings will be described for machines with cutter axis tilt as a general solution (Fig. 6). In this case, in the machine space a cone crown gear is generated. Then in the machine space is created so-called natural technological setup. This means, that the technological pair is composed with

cone crown gear and milled pinion. The cone crown gear generally represent the teeth of the design gear. For cutter tilt equal zero, in the machine space a flat crown gear is generated and therefore a swivel angle has no influence on generating gears. It should be noted that for pinion single side methods in the machine space are generated concave and convex crown cone gear.

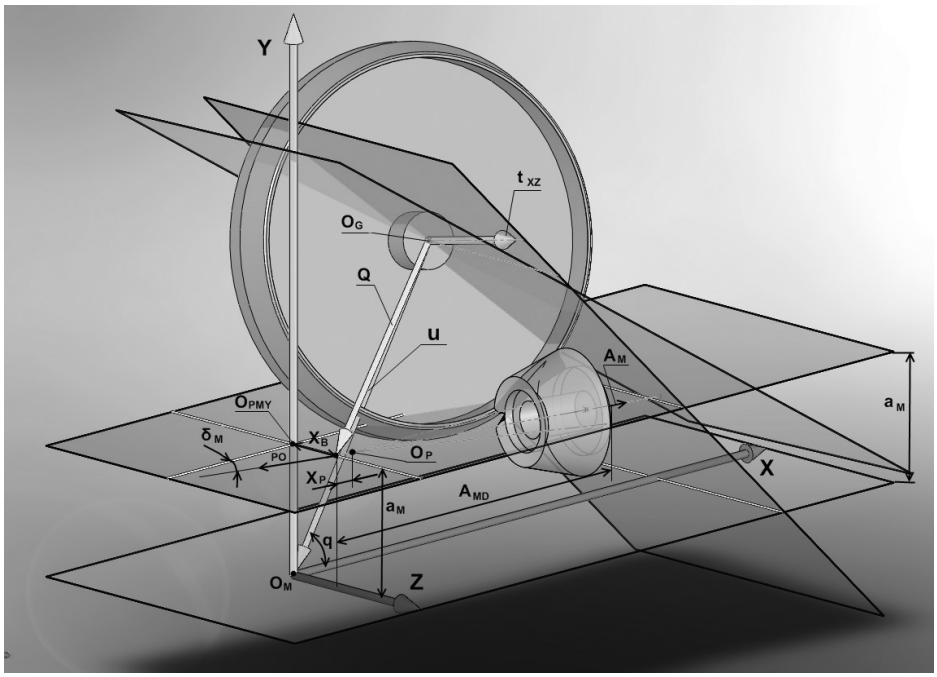

Fig. 6. Technological setup with tilt as a general setup

The following three points O_M, O_G and O_{PM} allow to define the following settings (Fig. 6):

- cradle angle ***q*** in the XY plane (cradle plane) defined by radial setting ***U*** and X axis,
- radial setting ***U*** as a distance in the cradle plane (XY plane) from machine center O_M to cutter center O_G,
- swivel angle ***j*** which defines the direction of cutter axis tilt. This angle is determined as a projection angle on the cradle plane and lies between perpendicular plane to the radial setting O_MO_G and the plane λ in which the cutter axis is tilted,
- cutter spindle rotation angle, tilt angle ***I*** formed by cutter axis which lies on the λ plane and cradle axis,

• root angle $\boldsymbol{\delta_M}$ in the horizontal (XZ) plane formed by work axis and cradle plane XY,

• work offset $\boldsymbol{a_M}$ as the distance between the cradle axis and work-piece axis. This distance is measured up or down to machine center O_M,

• head setting $\boldsymbol{X_P}$ the distance in the XZ plane measured along work axis between O_P point and O_{PM}. Point O_{PM} is the crossing point of work axis and parallel line to the Z axis in $\boldsymbol{a_M}$ distance and perpendicular to Y axis,

• sliding base $\boldsymbol{X_b}$ as a distance between machine center O_M and point O_{PM} in perpendicular direction to the cradle plane.

For the CNC bevel gear machine six independent coordinates describe the relative position between the cutter head and work-piece. The schematic drawing of the 6-axis CNC bevel gear machine is shown on Fig. 7. If this machine be adaptable for all gear cutting method, all six axis can be moved by the CNC controller during milling or hobbing process. The tilted cutter head of the classical machine can thus be replaced by rotation of the swivel table: it means rotation of coordinate system in B and A axes simultaneously (Fig. 7.). The task of the control unit is to bring together the work gear and cutter head in the same spatial position as they would be in the conventional machine in the same generating position. From one generating position to the next , the CNC machine must execute modifications in all its six axes (Fig. 8). CNC machine uses 6 axis: three linear and three rotational axis which are as following:

X – horizontal movement perpendicular to cutter head axis,
Y – vertical movement perpendicular to cutter head axis,
Z – horizontal movement parallel to cutter head axis,
A – rotation of work-piece about its axis,
B – rotation of the work head about vertical axis parallel to the Y axis,
C – rotation of the cutter head about its axis (for milling as a scalar value).

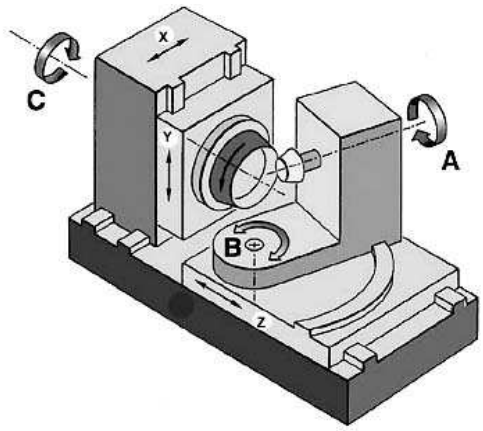

Fig. 7. Idea of 6-axis CNC bevel gear machine

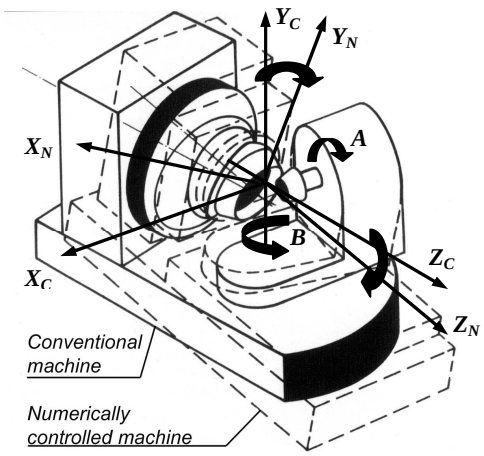

Fig. 8. Realization of tilt on CNC machine

Position of point P (Fig. 9 and 10) in coordinates S_p connected with cutter head is determine by the following equation:

$$r_p = [\ x_p\ \ y_p\ \ z_p\ ]^T = L_{mp} \cdot (r_m - T_{mp}\ ) \tag{1}$$

where: $L_{mp} = L_x\ L_y\ L_z$ – matrix of rotation coordinates S_m to S_p; L_x, L_y, L_z – matrixes of rotation around X, Y and Z axes; T_{mp} – vector of translation which is equal to r_{mp} radius.

The transition from the system S_p to system S_m (Fig. 10) connected with machine zero point O_M (cradle axis) can be determine as follow:

$$r_m = L_{pm}^{-1}\ r_p + T_{pm} = L_{mp}\ (r_p - T_{mp}\ ) \tag{2}$$

Continuous change in r_m vector components in function of cutter tilt $\boldsymbol{i}$ and swivel angle $\boldsymbol{j}$ while changing the cradle angle $\boldsymbol{q}$ (rolling motion) makes, that it is possible milling the pinions in the technological methods that require tilted cutter spindle. In order to realize the continuously movement of coordinates systems, it is necessary to solve numerous problems relative to control, motion transmission and guides, as well as measurement and control technology. Continuous transformation of coordinate systems allows the CNC machine which does not have tilted cutter spindle, mill the pinions with cone crown gears.

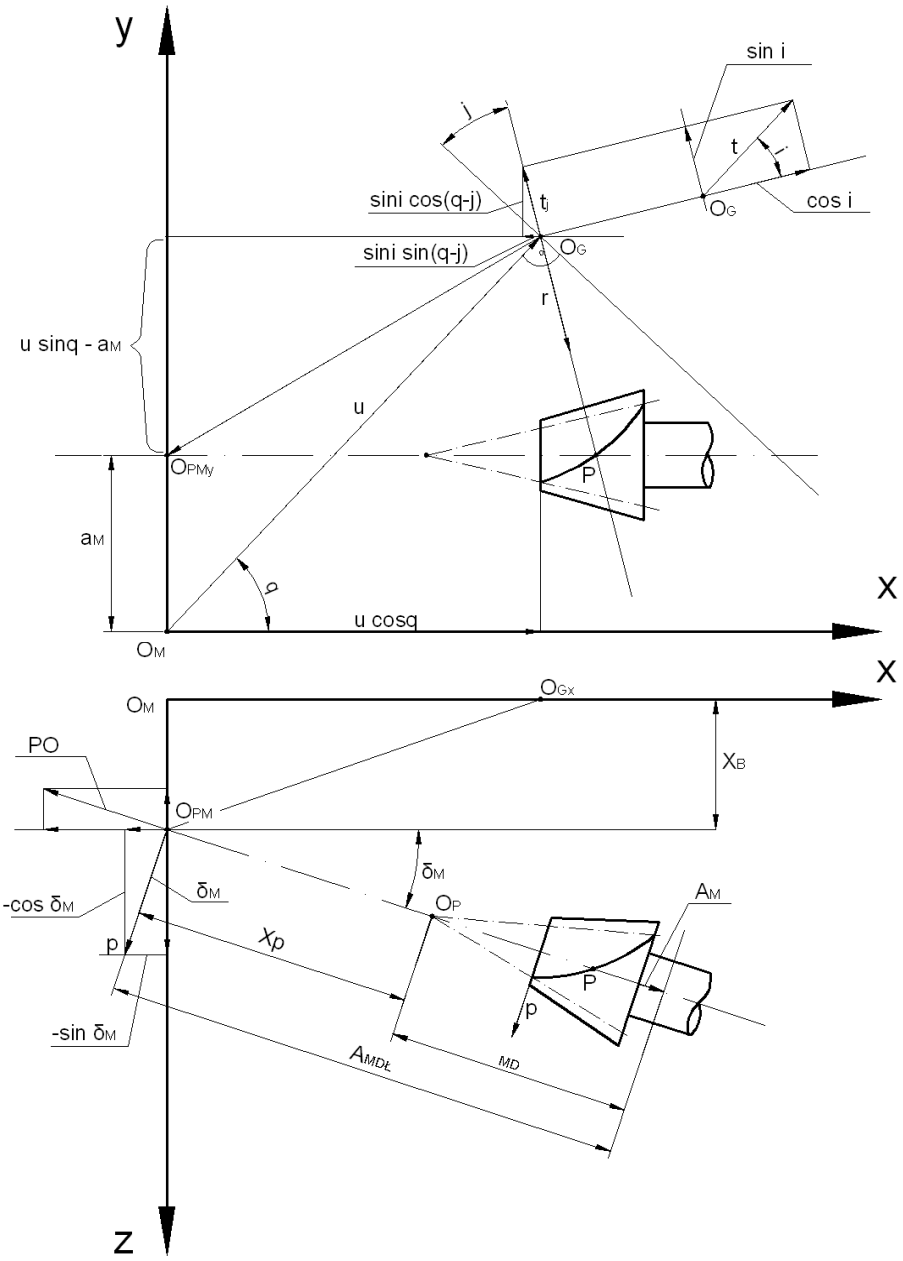

Fig. 9. Distribution of vectors for basic settings of the machine

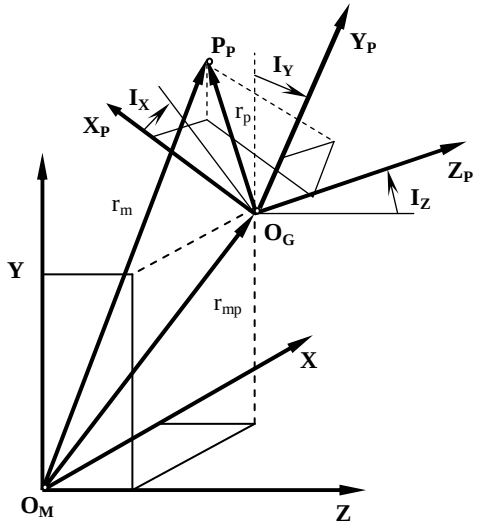

Fig. 10. Transformation of coordinates S_m and S_p

3. Conclusions

The CNC spiral bevel gear machine controlled in 6-axes has the common basic technological parameters with the conventional machine. While the setup parameters like head setting $\boldsymbol{X_P}$, sliding base $\boldsymbol{X_b}$, work offset $\boldsymbol{a_M}$, root angle $\boldsymbol{\delta_M}$ are accepted directly from basic technological calculations, the other parameters need to be converted to machine's coordinates XY. The cradle motion which is realized as a circular interpolation retains the value of basic decimal roll ratio. The basic technological settings are the input data to CNC controller. Even though the cutter axis is parallel to the Z axis and perpendicular to the XY plane, because of continuous transformation of the coordinates it is possible to use the technological methods with cutter tilt. The CNC machines allow to cut spiral and hypoid bevel gears independently of the cutting system.

Acknowledgement

Financial support of Structural Funds in the Operational Programme – Innovative Economy (IE OP) financed from the European Regional Development Fund – Project No POIG.0101.02-00-015/08 is gratefully acknowledged.

References

[1] LITVIN F.L., FUENTES A.: Gear geometry and applied theory. University Press, Cambridge 2004.
[2] Z. WOJCIK: Przekładnie stożkowe, WNT, Warszawa 1984.
[3] H.J. STADTFELD: Handbook of bevel and hypoid gears. Rochester Institute of Technology, Rochester 1993.
[4] P. SKAWINSKI: Computer integrated design and manufacturing of spiral and hypoid bevel gears. Proc. XI Inter. Conference "Computer Simulation in Machine Design – COSIM2006", Krynica Zdrój 2006.
[5] P. SKAWINSKI: Computerized integration of design and manufacturing of spiral and hypoid bevel gears. Proc. XVII Inter. Conference FAIM2007. Philadelphia 2007.
[6] P. SKAWINSKI: Virtual model of 6-axis CNC spiral bevel and hypoid milling machine. Proc. CADMD 2008 – Ukrainian-Polish Conference, Lviv 2008.
[7] P. SKAWINSKI: Neural classifiers in recognizing of the tooth contact of spiral and hypoid Gleason bevel gears. *Advances in Manufacturing Science and Technology*, **36**(2012)2, 69-78.

Received in February 2012